Sealco Commercial Vehicle Products, Inc. Phoenix, Arizona

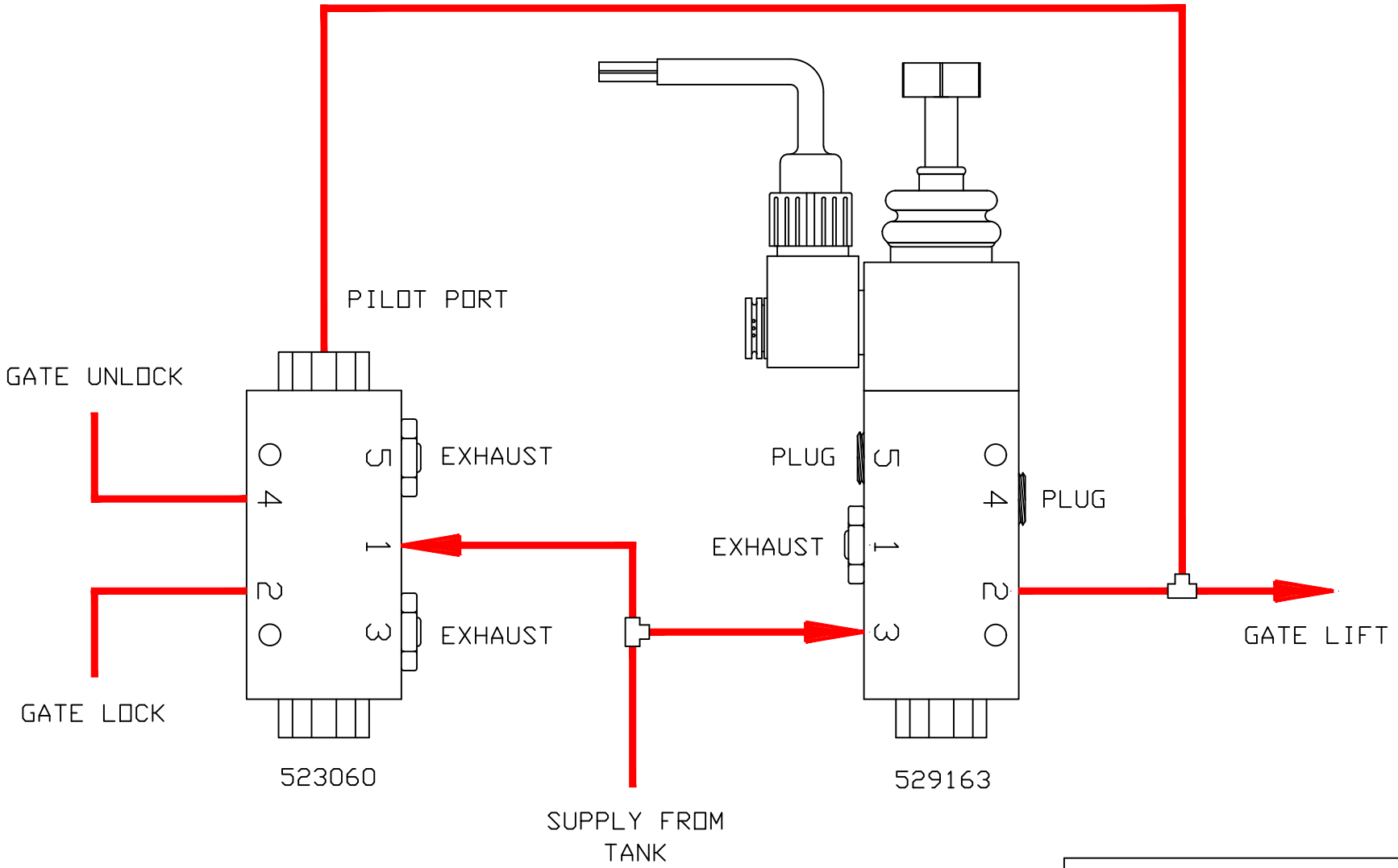

GATE CONTROL			
DR: MG	CH: FF	DATE: 1-8-2024	DRAWING NO: P-8154